Infinity Corrected Optical System

MT4000 Series

BIOLOGICAL MICROSCOPES

Brightfield / Phase Contrast

MEIJI TECHNO

MT4200L / MT4200H

MEIJI TECHNO MT4000 Series

The Meiji Techno MT4000 Series of biological microscopes have been designed as versatile, modular, ergonomic microscope systems which are ideally suited for use in education, research, or advanced laboratory applications.

Ergonomic placement of controls allows for stress free operation, increased efficiency and maximum productivity.

Operating comfort and ease of use are top design priorities.

The MT4000 Series microscopes feature a new computer engineered rigid frame that incorporates low positioned coaxial coarse/fine focus controls and ergonomic stage design for maximum efficiency and comfort while also providing an extremely stable operating platform.

The MT4000 Series offers an outstanding range of features and optical performance with an emphasis on all newly engineered high performance optics based on Meiji Techno's ICOS™ Optical System (Infinity Corrected Optical System).

The new optics, provide exceptionally bright, crisp images, with good color rendition and superior flat fields of view.

A modular design facilitates attachment of a variety of accessories such as CMOS/CCD video cameras, digital still cameras, and 35mm cameras.

The MT4000 Series Microscopes offer crisp, distortion free, high resolution imagesin multiple modes of operation.

Contrast methods available include: Bright-field and Phase Contrast.

MT4300L / MT4300H

Features

- Compact Space Saving Footprint
- Infinity Corrected Optical System (ICOS™) with all newly designed Optics
- Comfortable Siedentopf-type Binocular and Trinocular Viewing Heads
- Optional Ergonomic tilting binocular head — Adjustable vertically from 10˚to 50˚
- Ceramic Coated Stage with Ergonomically Placed Low Position Drop Down Control
- Low Positioned Ergonomic Coaxial Focus Control
- Smooth Operating Ergonomic Quintuple Nosepiece
- Brightfield and Phase Contrast Observation modes available.
- Super Bright LED Koehler Illumination
- Integrated 30-watt Halogen Koehler Transmitted Illumination System on selected Brightfield and Phase Contrast Models
- Abbe and Zernike Phase Contrast Condensers available
- Integrated Automatic Voltage Sensing Power Supply with localized power cordset (Transmitted Light Models)
- Wide Range of Filters and Accessories

MT4210H

MT4310H

MT4000 Series ORDERING INFORMATION

MODEL	BODY	OBJECTIVES	EYEPIECES	STAGE	CONDENSER	ILLUMINATOR
MT4200L	Binocular	Plan 4X 10X S40X S100X oil	KHW10X, F.N.20 (O.D.23.2mm)	Ceramic Coated Flat-top	Abbe type N.A.1.25 with Blue filter	LED Illuminator Koehler
MT4300L	Trinocular					
MT4200H	Binocular					6V 30W Halogen Koehler
MT4300H	Trinocular					
MT4210H	Binocular	Plan 4X S Plan Phase 10X, S40X with centering telescope			Zernike type Phase N.A.1.25 with Green filter	
MT4310H	Trinocular					

- Supplied in styrofoam case with dust cover and instruction manual.
- Left hand control mechanical stage is optional. Please indicate "MA917L Left hand control mechanical stage" in the description when ordering.

MEIJI TECHNO

COMPONENTS & ACCESSORIES FOR MT4000 SERIES

VIEWING HEAD (without eyepieces)

MA815/05 Binocular head (Siedentopf type, I.P. adjustment 53mm to 75mm graduated diopter on left eyetube (23.2mm I.D.eyetubes). Inclined at 30˚. (Included in Model MT4200L, MT4200H & MT4210H)

MA816/05 Trinocular head (Siedentopf type, I.P. adjustment 53mm to 75mm graduated diopter on left eyetube (23.2mm I.D.eyetubes). Inclined at 30˚. (Included in Model MT4300L, MT4300H & MT4310H)

MA957/05 Ergonomic head, inclination adjustable vertically from 10˚ to 50˚ (23.2mm I.D.eyetubes).

MA958 Photo/Video attachment with sliding 80/20 beam-splitter for attaching video or digital camera to MT Series when MA957/05 Ergonomic head is used.

EYEPIECES

MA407 KHW10X Compensating eyepiece, Field No. 20, Tube O.D. 23.2mm (21mm reticle mount) (Paired MA407 Eyepieces included in all MT4000 Series models)

MA408 HWF15X, Widefield eyepiece, Field No. 12.2, Tube O.D. 23.2mm (No reticle mount)

MA409 HWF20X, Widefield eyepiece, Field No. 9, Tube O.D. 23.2mm (No reticle mount)

MA406 HWF10X Widefield High-eyepoint eyepiece, Field No. 18. Tube O.D. 23.2mm (19mm reticle mount)

MA413 HWF-10X Focusing eyepiece with reticle mount, Field No. 18, Tube O.D. 23.2mm (19mm reticle mount)

PLANACHROMAT OBJECTIVES (Included in Models MT4200L, MT4300L, MT4200H & MT4300H)

MA965 Plan Objective 4X, N.A.0.10, W.D.15.3mm

MA966 Plan Objective 10X, N.A.0.25, W.D.7.3mm

MA968 Plan Objective 40X, spring loaded, N.A.0.65, W.D.0.72mm

MA970 Plan Objective 100X, spring loaded, N.A.1.25, oil, W.D.0.14mm

SEMI PLANACHROMAT PHASE OBJECTIVES AND CENTERING TELESCOPE (Included in Models MT4210H & MT4310H)

MA930 S Plan Phase 10X Objective, N.A.0.25, W.D.7.3mm

MA931 S Plan Phase 20X Objective, spring loaded, N.A.0.40, W.D.9.1mm

MA932 S Plan Phase 40X Objective, spring loaded, N.A.0.65, W.D.0.72mm

MA933 S Plan Phase 100X Objective, spring loaded, N.A.1.25 oil, W.D.0.14mm

MA458 Centering Telescope, 23.2mm O.D.

CONDENSER

MA910 Abbe condenser, N.A.1.25 with iris diaphragm in dovetail mount (Included in Models MT4200L, MT4300L, MT4200H & MT4300H)

MA911 Achromatic condenser, N.A.1.25 with iris diaphragm in dovetail mount

MA913 Zernike Phase condenser with centerable phase annuli for 10X, 20X, 40X, 100X with brightfield position, darkfield stop for 40X objective, (black-out position for epi-fluorescence on MT6000 Series only) with iris in dovetail mount (Included in Models MT4210H & MT4310H)

POLARIZER

MA915 Polarizer set for MT4000 Series

FILTERS

MA858/05 ND25 Neutral density filter, 44.0mm diameter, unmounted

MA856/05 LB100 Blue Clear filter 44.0mm diameter, unmounted (Included in Models MT4200H, MT4300H, MT4210H & MT4310H)

MA857/05 Green filter, clear, 44.0mm diameter, unmounted (Included in Models MT4210H & MT4310H)

MA861/05 Green interference filter, 44.0mm diameter, unmounted

STAGES

MA917R Ceramic coated flat-top stage, 78mm x 52mm, X-Y movement, with right hand drop-down coaxial controls. (Included in all Models)

MA917L Ceramic coated flat-top stage, 78mm x 52mm, X-Y movement, with left hand drop-down coaxial controls. (Optional)

MA598 Attachable finger assembly for MA917R and MA917L

MISCELLANEOUS

MA200 Eyeshield for MA407 KHW10X Eyepiece (ea)

MA326 Spare bulb 6V 30W Halogen lamp

MA327 Spare 3A Fuse for Halogen illuminator

MA929 Spare Fuse 0.5A for LED Illuminator

MA809/10 Removable AC Electric cord with UL plug for 115V models

MA809/20 Removable AC Electric cord with European plug for 220V models

MA809/30 Removable AC Electric cord with UK plug for 240V models

MA701 Dust Cover for MT4000 Series

MA957/05 Ergonomic head

Zernike Phase Set

PHASE CONTRAST SET, comprising:
Zernike Phase condenser, S Plan Phase Objectives 10X, 20X, 40X, 100X, Centering Telescope (MA458) and Green filter (MA857/05)

MEIJI TECHNO

COMPONENTS & ACCESSORIES FOR MT4000 SERIES

EYEPIECE MICROMETERS (FOR USE WITH MA407 EYEPIECE)

MA284 Cross-line reticle, 21mm diameter
MA255 Eyepiece micrometer, 10mm divided into 100 units, 21mm diameter
MA256 Eyepiece micrometer 5mm divided into 100 units, 21mm diameter
MA283/05 10mm square divided into 100 parts, 1.0mm square, 21mm diameter
MA540 Cross-line with 0.1mm graduations, 21mm diameter
MA254/05 Walton and Beckett reticle 21mm diameter

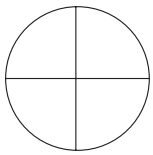
MA284
Cross-line

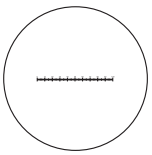
MA255
10mm in 100 parts

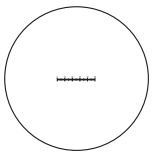
MA256
5mm in 100 parts

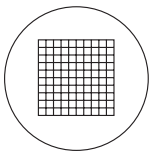
MA283/05
10mm square in 100 square

STAGE MICROMETERS

MA285 Objective micrometer, 0.01mm ruling
MA286 0.04" divided into 40 units, 0.001"

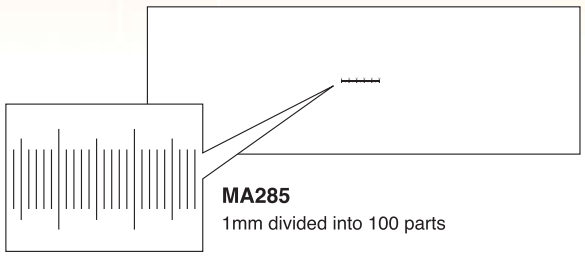
MA285
1mm divided into 100 parts

DIGITAL 35mm SLR CAMERAS

Following three accessories are required for 35mm SLR camera photomicrography

1. Camera Attachment

MA150/50 Camera attachment to fit to photo tube of trinocular models
MA150/60 Camera attachment as above, but with eyepiece finder

2. Photo Eyepiece

MA512 Photo eyepiece 2.5X (Magnifies objective power by 2.5X at the film plane)
MA508 Photo eyepiece 5X (Magnifies objective power by 5X at the film plane)
MA500 Photo eyepiece 3.3X (Magnifies objective power by 3.3X at the film plane, with reticle mount)

Photo Eyepiece

T2 Adapter Ring

MA150/50

3. T-2 Adapter Ring

T2-1 Adapter ring for CANON camera
T2-2 Adapter ring for MINOLTA camera
T2-3 Adapter ring for PENTAX K, RICOH-XR camera
T2-4 Adapter ring for PENTAX S camera
T2-5 Adapter ring for NIKON camera
T2-6 Adapter ring for OLYMPUS camera
T2-7 Adapter ring for CONTAX, YASHIKA camera
T2-8 Adapter ring for KONICA camera
T2-9 Adapter ring for CANON EOS camera
T2-10 Adapter ring for MINOLTA α, MAXIM 2000 camera

CCD VIDEO & USB 2.0 DIGITAL CAMERAS

CK3100N CCD Color TV camera. 1/3" CCD, 450 TV lines of resolution, NTSC system with DC12V adapter
CK3100P CCD Color TV camera. 1/3" CCD, 450 TV lines of resolution, PAL system with DC12V adapter
CK3900N CCD Color TV camera. 1/2" CCD, 450 TV lines of resolution, NTSC system with DC12V adapter
CK3900P CCD Color TV camera. 1/2" CCD, 450 TV lines of resolution, PAL system with DC12V adapter

CK3900

DK3000 3.0 megapixel, color digital video microscopy camera with high speed USB 2.0 interface, 1/2 format 6.5mm x 4.9mm image sensor with 2048 x 1536 resolution.

DK3000

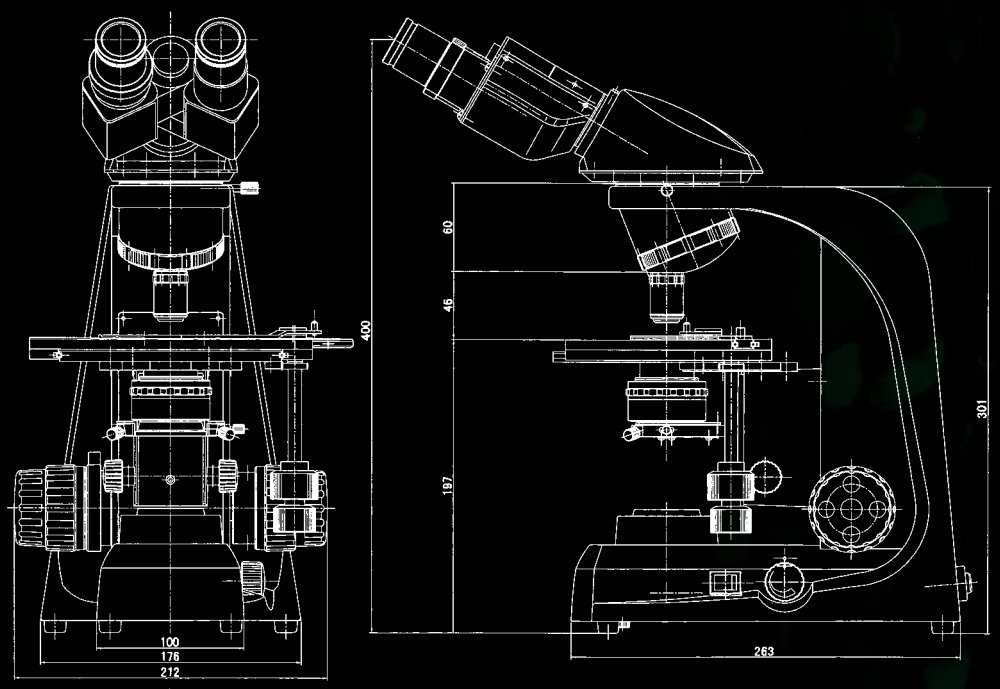

Size and Weight of MT4000 Models

Footprint : 263 mm(D) x 176mm(W)
Weight & Overall Dimension :
Binocular head type 390 mm(D) x 410 mm(H) x 210 mm(W), 8.0kg
Trinocular head type 390 mm(D) x 465 mm(H) x 210 mm(W), 8.7kg

Agent :

the microscope depot

Sales: 888-777-8835 • Email: sales@m–depot.com
Main: 209-839-2990 • Fax: 888-872-4300
http://www. m–depot .com

MEIJI TECHNO CO.,LTD.
322-1, Chikumazawa Miyoshi-machi,
Iruma-gun Saitama 354-0043, Japan
Tel : (0)49-259-0111 Fax : (0)49-259-0113
E-mail : meiji@meijitechno.co.jp
http://www.meijitechno.co.jp

MEIJI TECHNO AMERICA
3010 Olcott Street, Santa Clara, CA 95054, USA
Tel : 408-970-4799 Fax : 408-970-5054
Toll free : 800-832-0060
E-mail : sales@meijitechno.com
http://www.meijitechno.com

MEIJI TECHNO

Specifications and design subject to change without notice for improvements.

'08. 02. 320. 10,000 V1 Printed in Japan